REVISIONS			
REV	DESCRIPTION	ECN	BY	DATE
B	INITIAL RELEASE	30041	BB	TB	7/28/04

THANK YOU FOR CHOOSING PANELTRONICS,INC. THIS WIRING DIAGRAM WILL AID YOU IN THE INSTALLATION OF YOUR NEW PANEL. IT SHOULD BE KEPT FOR FUTURE REFERENCE AND SERVICE TO THE ELECTRICAL CONTROL PANEL. WITH PROPER MAINTENANCE, YOU WILL ENJOY MANY YEARS OF RELIABLE OPERATION.

ALL PANELTRONICS PRODUCTS SHOULD BE USED AND INSTALLED IN ACCORDANCE WITH THE PROVISIONS OF THE NATIONAL ELECTRIC CODE, U.L. AND OTHER LOCAL, MILITARY OR INDUSTRY STANDARDS THAT ARE PERTINENT TO THE PARTICULAR END USE. IN MARINE INSTALLATIONS, ALL PANELS MUST BE INSTALLED TO MEET THE REQUIREMENTS OF U.S.C.G. 33CFR SUBPART 1, ELECTRICAL SYSTEMS, ON ALL BOATS THAT HAVE GASOLINE ENGINES FOR ELECTRICAL OR MECHANICAL POWER OR PROPULSION, EXCEPT OUTBOARD ENGINES. AMERICAN BOAT AND YACHT COUNCIL (ABYC) STANDARDS AND RECOMMENDED PRACTICES SHOULD ALSO BE FOLLOWED.

PANELTRONICS INCORPORATED IS A COMPANY COMMITTED TO TOTAL QUALITY AND CONTINUOUS PRODUCT RESEARCH, DEVELOPMENT AND IMPROVEMENT. THEREFORE ALL INFORMATION AND SPECIFICATIONS ON THIS DIAGRAM ARE SUBJECT TO CHANGE WITHOUT NOTICE.

CONTACT DEVELOPMENT SWITCH 006-035

POSITION #1 (HANDLE AT 10:00 *)

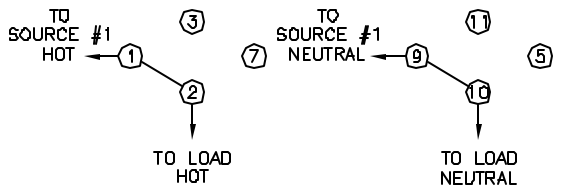

POSITION #2 (HANDLE AT 12:00 *)

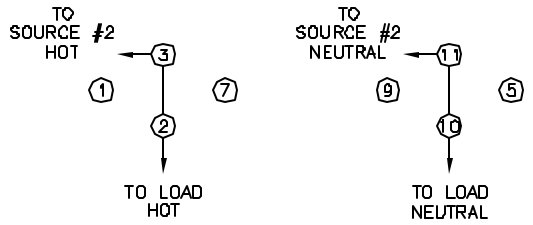

POSITION #3 (HANDLE AT 2:00 *)

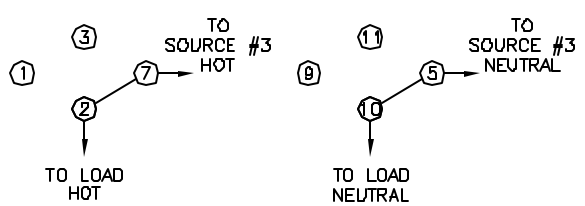

* AS SEEN FROM PANEL FRONT

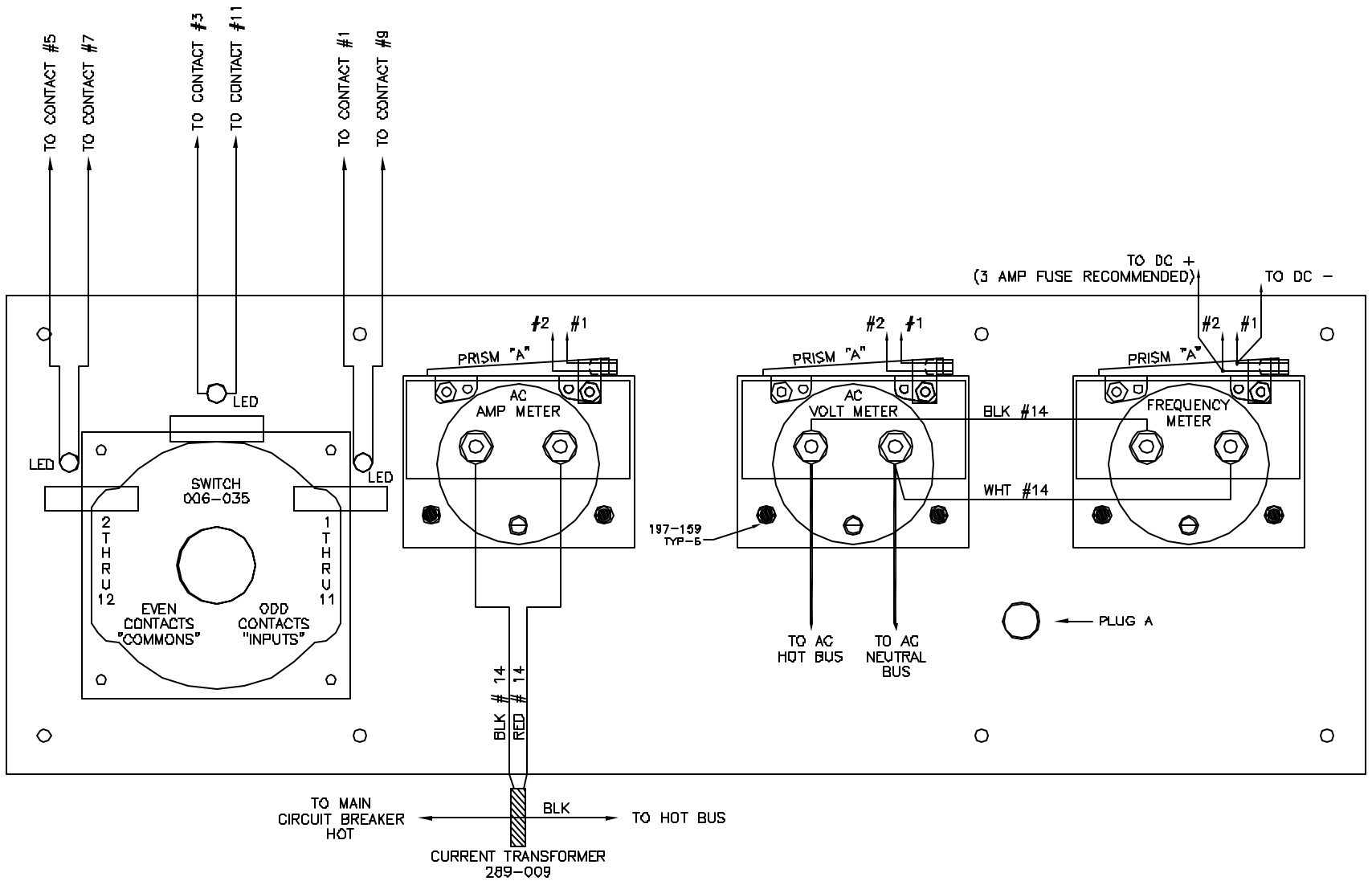

AC AMP METER	
RATING	PART NO
5D ACA*	289-004
5D ACA	289-011
8D ACA	289-006
10D ACA	289-024
DIGITAL	570-004

* DIRECT READ

AC VOLT METER	
RATING	PART NO
0-150 VAC	289-003
0-300 VAC	289-007
DIGITAL	57D-003

FREQUENCY METER	
RATING	PART NO
55-65 HZ	289-029
45-55 HZ	289-027
DIGITAL	57D-005

METER ILUMINATION PRISM "A"	
RATING	PART NO
12 VDC	100-249-7
24 VDC	100-249-8
32 VDC	100-249-9

LED "A"	
RATING	PART NO
120V	048-016
240V	048-027

PLUG "A"	
COLOR	PART NO
BLACK	016-004
WHITE	016-020

EXCLUSIVE PROPERTY OF PANELTRONICS INC. NOT TO BE USED WITHOUT PRIOR WRITTEN AUTHORIZATION. THIS DOCUMENT CONTAINS INFORMATION WHICH PANELTRONICS HAS EXCLUSIVE RIGHTS.

NOTES:

MATERIAL:

DRAWN BY	DATE	
LS	03/06/98	
SHEET	SCALE	SIZE
2 or 3	1X	D

PANELTRONICS

Paneltronics, Inc.
11850 N.W. 87th Court
Hialeah Gardens, FL 33018

REAR VIEW
PNL, AC METER PANEL (PREMIER)
W/O SWITCH, AC PANEL

CUSTOMER: PANELTRONICS

SERIES/MODEL: CAT

DRAWING #: 4317

REV: 0

THANK YOU FOR CHOOSING PANELTRONICS,INC. THIS WIRING DIAGRAM WILL AID YOU IN THE INSTALLATION OF YOUR NEW PANEL. IT SHOULD BE KEPT FOR FUTURE REFERENCE AND SERVICE TO THE ELECTRICAL CONTROL PANEL. WITH PROPER MAINTENANCE, YOU WILL ENJOY MANY YEARS OF RELIABLE OPERATION.

ALL PANELTRONICS PRODUCTS SHOULD BE USED AND INSTALLED IN ACCORDANCE WITH THE PROVISIONS OF THE NATIONAL ELECTRIC CODE, U.L. AND OTHER LOCAL, MILITARY OR INDUSTRY STANDARDS THAT ARE PERTINENT TO THE PARTICULAR END USE. IN MARINE INSTALLATIONS, ALL PANELS MUST BE INSTALLED TO MEET THE REQUIREMENTS OF U.S.C.G. 33CFR SUBPART 1, ELECTRICAL SYSTEMS, ON ALL BOATS THAT HAVE GASOLINE ENGINES FOR ELECTRICAL OR MECHANICAL POWER OR PROPULSION, EXCEPT OUTBOARD ENGINES. AMERICAN BOAT AND YACHT COUNCIL (ABYC) STANDARDS AND RECOMMENDED PRACTICES SHOULD ALSO BE FOLLOWED.

PANELTRONICS INCORPORATED IS A COMPANY COMMITTED TO TOTAL QUALITY AND CONTINUOUS PRODUCT RESEARCH, DEVELOPMENT AND IMPROVEMENT, THEREFORE ALL INFORMATION AND SPECIFICATIONS ON THIS DIAGRAM ARE SUBJECT TO CHANGE WITHOUT NOTICE.

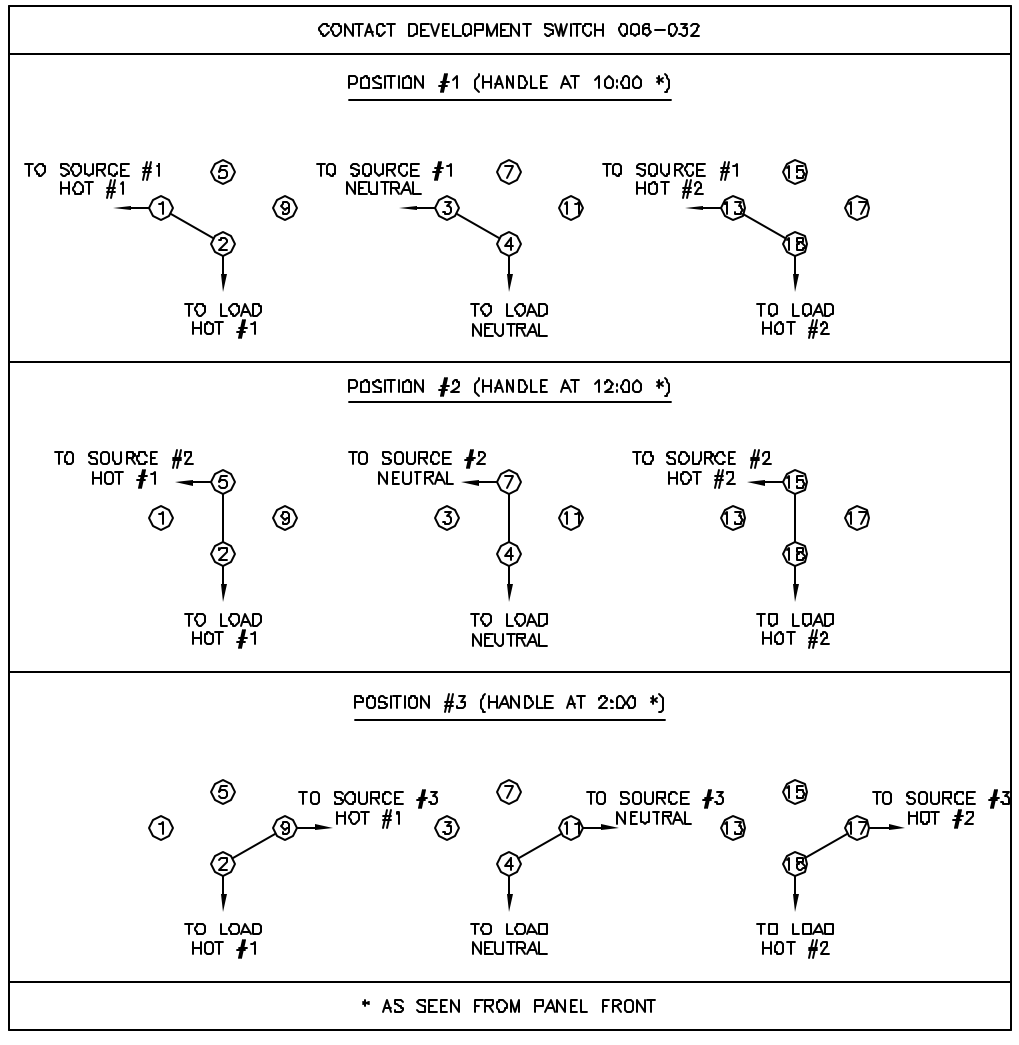

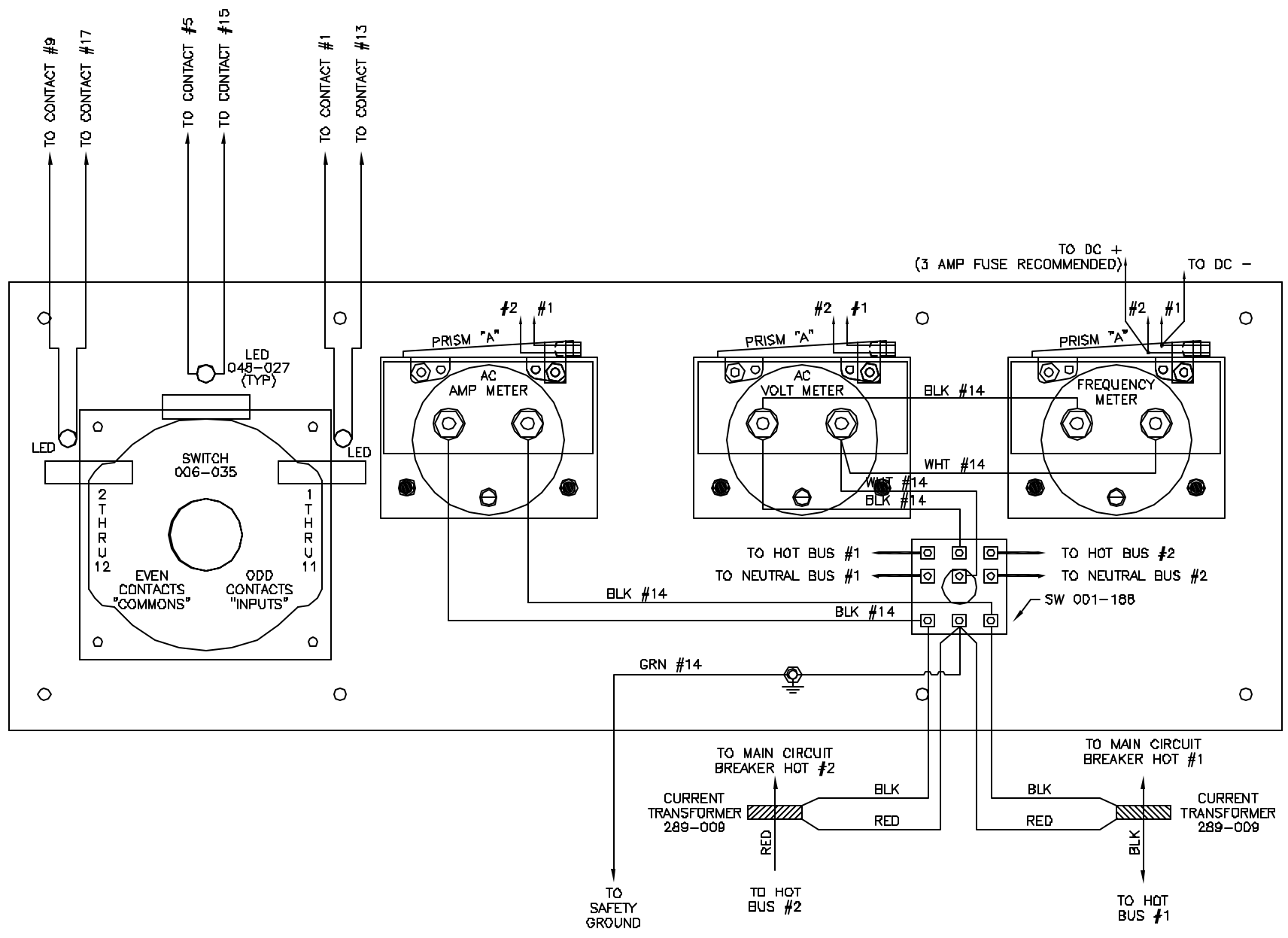

AC AMP METER	
RATING	PART NO
50 ACA	289-011
80 ACA	289-006
100 ACA	289-024
DIGITAL	570-004

FREQUENCY METER	
RATING	PART NO
55-65 HZ	289-029
DIGITAL	570-005

AC VOLT METER	
RATING	PART NO
0-150 VAC	289-003
DIGITAL	570-003

METER ILUMINATION PRISM "A"	
RATING	PART NO
12 VDC	100-249-7
24 VDC	100-249-8
32 VDC	100-249-9

REVISIONS

REV	DESCRIPTION	ECN	BY	DATE
0	INITIAL RELEASE	2004-08	TS	7/28/04

PANELTRONICS INCORPORATED
Paneltronics, Inc.
11850 N.W. 87th Court
Hialeah Gardens, FL 33018

REAR VIEW
PNL, AC METER PANEL (PREMIER)
W/ SWITCH, 240VAC PANEL

DRAWN BY: LS	DATE: 03/06/98	CUSTOMER: PANELTRONICS		
SHEET: 2 of 3	SCALE: 1X	SIZE: D	SERIES/MODEL: CAT	DRAWING #: 4317	REV: 0